AES Raptor STINGER™

PATENT PENDING

Mobile Fall Protection System Anchorage Unit

Instruction Manual (English Only)

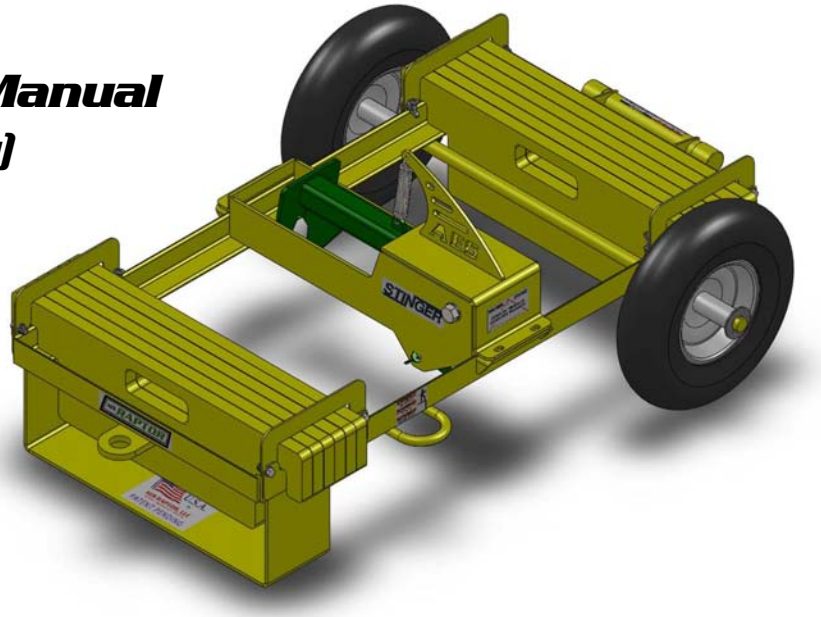

WARNING

Serious injury or death may result if this product is used for purposes other than designed. The manufacturer provides the following instructions for the use and care of this equipment. It is the responsibility of the purchaser to understand and convey explicit instruction to each user. The AES Raptor STINGER™ complies with the requirements of the Federal Occupational Safety and Health Administration (OSHA) when set up and used according to the manufacturers' instructions.

ENGLISH

AES Raptor, LLC - Raptor STINGER™ Instruction Manual

Published by AES Raptor, LLC, North Kansas City, MO

AES RAPTOR COMPLETE MOBILE FALL PROTECTION SYSTEM
is a registered trademark of
AES Raptor, LLC
1349 Taney
North Kansas City MISSOURI 64116
www.raptorsafety.com

Copyright © 2010 by AES Raptor, LLC

PRINTED IN THE UNITED STATES OF AMERICA

ENGLISH

DIAGRAM OF PARTS

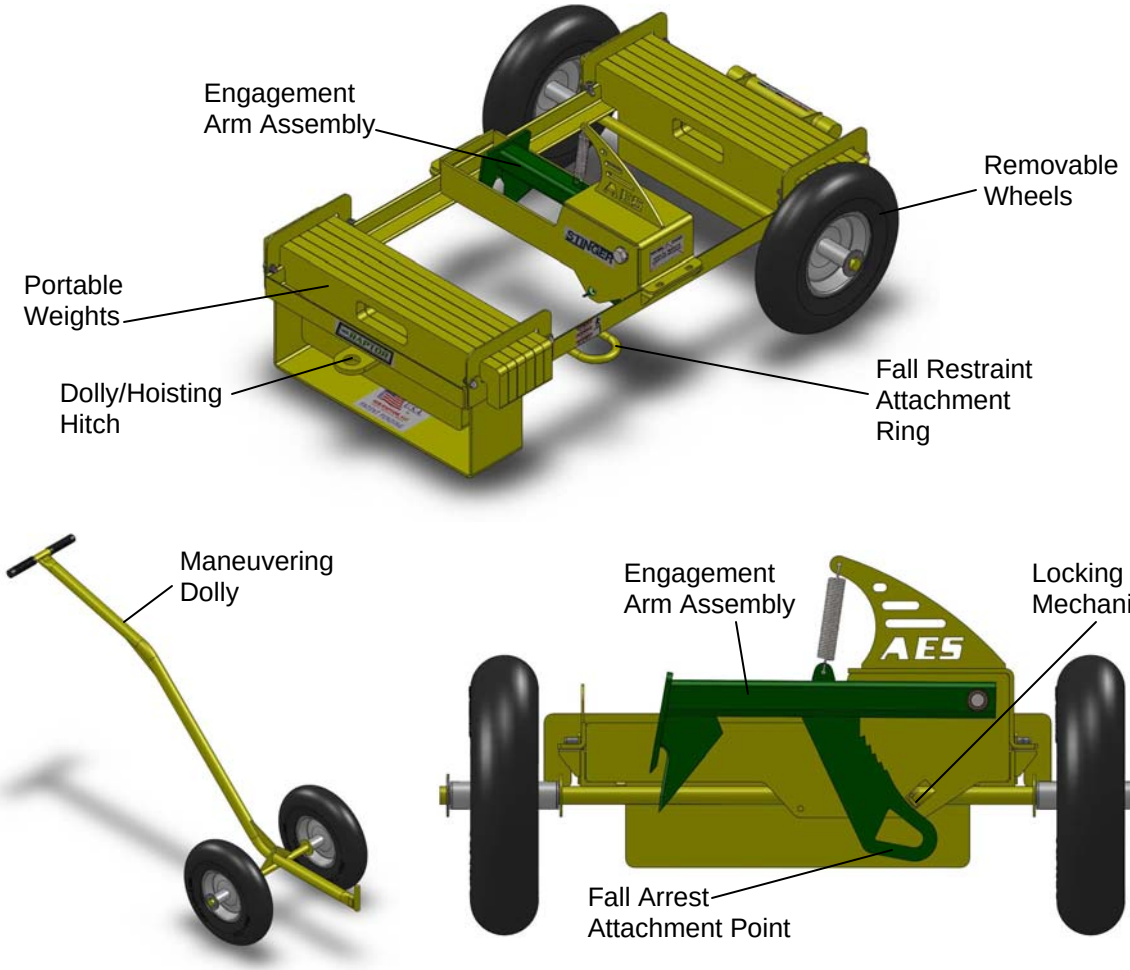

Patent Pending

1.0 ASSEMBLY

If the STINGER™ Unit was disassembled before positioning on elevated surface, secure the portable weights by bolting each latch in place, bolt the Main Engagement Arm Carriage to the frame, and install the removable wheels by inserting the wheel pins:

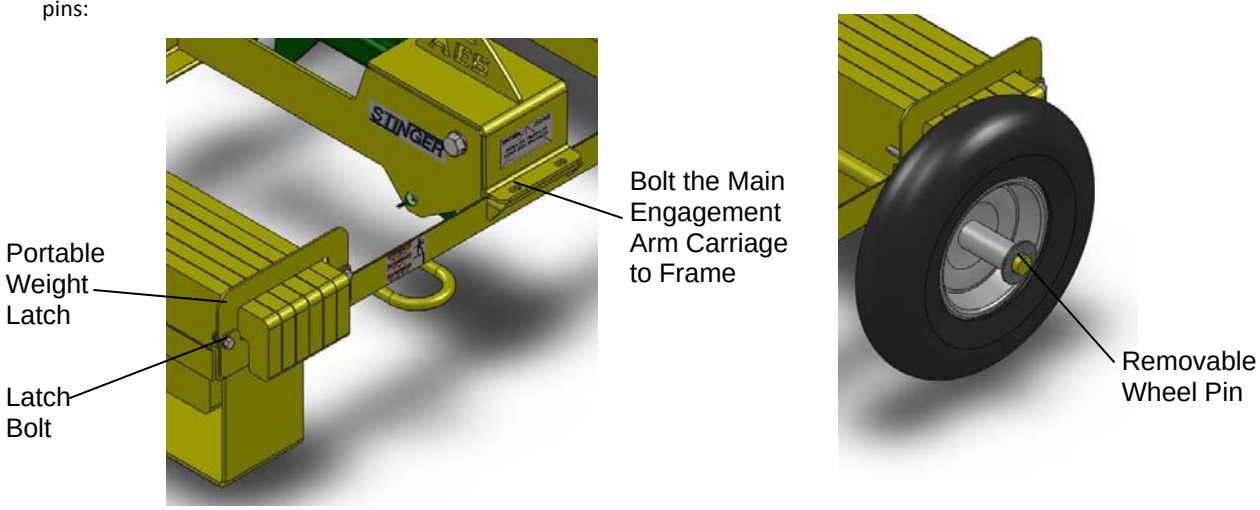

2.0 APPLICATIONS

2.1 The Raptor STINGER™ is to be used as an anchorage in a complete mobile fall protection system. The Raptor STINGER™ may be used where worker mobility and fall protection are required. See WWW.OSHA.GOV for all regulations and standards.

2.2 When set up properly the Raptor STINGER™ allows for one worker to be tied off for fall arrest (using the specially designed fall arrest tie-off point) and an additional one worker tied-off for fall restraint using the fall restraint tie-off ring. See the following definitions:

DEFINITIONS:

A. **Fall Restraint System** – A fall restraint system (FRS) *prevents* the user from falling. The system is comprised of a body harness along with an anchorage, connectors and other necessary equipment. The components typically include a lanyard and also may include a lifeline and other devices. The Raptor STINGER™ can be used as an anchorage in a fall restraint system for one worker.

B. **Personal Fall Arrest System** – A personal fall arrest system (PFAS) arrests a fall *after* a fall has begun. The system is comprised of an anchorage, connectors, and a body harness and may include a deceleration lifeline, or suitable combinations. Note that a PFAS does NOT prevent a fall from occurring. The Raptor STINGER™ can be used as an anchorage in a PFAS for one worker. A Personal Fall Arrest System must meet the following OSHA requirements:

- Limit maximum arresting force on an employee to 1,800 pounds when used with a body harness;
- Be rigged so that an employee can neither free-fall more than 6 feet (1.8 meters) nor contact any lower level;
- Bring an employee to a complete stop and limit maximum deceleration distance an employee travels to 3.5 feet (1.07 meters); and
- Have sufficient strength to withstand twice the potential impact energy of an employee free-falling a distance of 6 feet (1.8 meters) or the free-fall distance permitted by the system, whichever is less.

C. **Anchorage** — An anchorage is a secure point of attachment for lifelines, lanyards, or deceleration devices. The Raptor STINGER™ is an anchorage.

3.0 USE AND LIMITATIONS

3.1 USE ON LOW SLOPE SURFACES ONLY

3.2 RECOMMENDED SURFACES INCLUDE:

1. Built-up Roofing (BUR) Membrane
2. Modified PVC Membranes
3. Thermoplastic Polyolefin (TPO) Membranes
4. EPDM Roofing Membranes
5. Ballasted EPDM Membrane
6. Modified Bitumen Membranes
7. Metal Deck (20 ga. And 22 ga. ONLY)
8. Dens Deck
9. Hardboard
10. Plywood
11. Gypsum Deck
12. Polyisocyanurate (ISO)
13. Expanded Polystyrene (EPS)
14. 4,000 and 6,000 psi Concrete* (See below)
15. Flat Surfaces to slopes up to 1:12.

*For Concrete surfaces, see Section 12.0 for concrete use limitations.

3.3 DO NOT USE THE STINGER™ UNIT ON THE FOLLOWING SURFACES:

1. Tectum Deck
2. Metal Deck less than 22 ga. Or over 20 ga. (Structural Deck)
3. Loose laid material not part of a complete finished system.
4. Ice
5. Snow

**** BEFORE A STINGER™ IS HOISTED TO ANY ROOF SURFACE ****
THE CONTRACTOR MUST VERIFY THAT THE DECK ASSEMBLY CAN ACCOMMODATE THE LIVE LOAD REQUIREMENTS OF THE STINGER™ .

3.4 CAPACITY: The Raptor STINGER™ Mobile Fall Protection System is designed for a maximum of one person for fall arrest and one for fall restraint with a combined weight (clothing, tools) of no more than 310 lbs. per person. No more than two persons may be connected to the Raptor STINGER™ at any time.

IMPORTANT: DO NOT begin work for which fall protection is required until the STINGER™ unit and corresponding FRS or PFAS have been completely installed. Do NOT disable any part of the FRS or PFAS, including the STINGER™ unit, or reposition the STINGER™ unit, until work for which fall protection is required has ceased.

3.5 POSITIONING THE UNIT: First, verify that the surface that the Raptor STINGER™ will be installed onto is capable of supporting the product and personnel using it. A complete assessment of the entire surrounding areas should be made to determine if the working surfaces have the strength and structural integrity to support users safely.

A. Position the Raptor STINGER™ such that the fall arrest attachment point is between 12 to 15 feet from the leading edge, and in line with the middle of the area to be worked. Refer to the Illustration below:

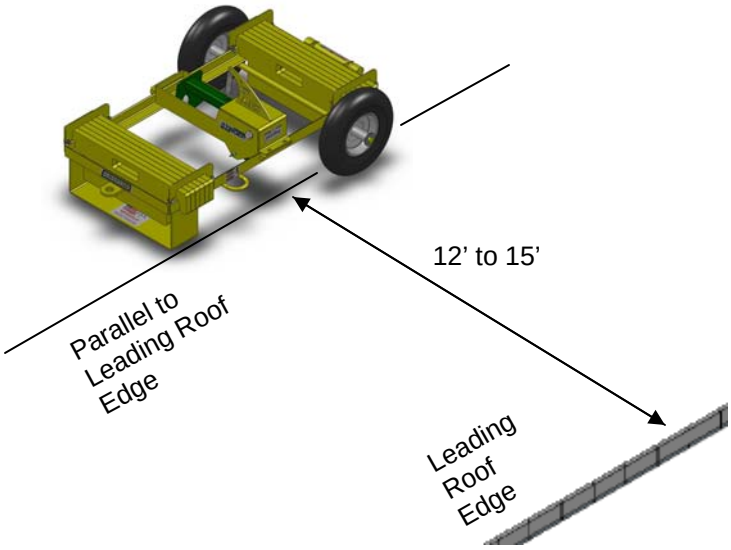

B. Make sure the Attachment Tie-off Point is pointing toward the leading edge and the cart is set to travel parallel to the leading edge.

PLAN VIEW

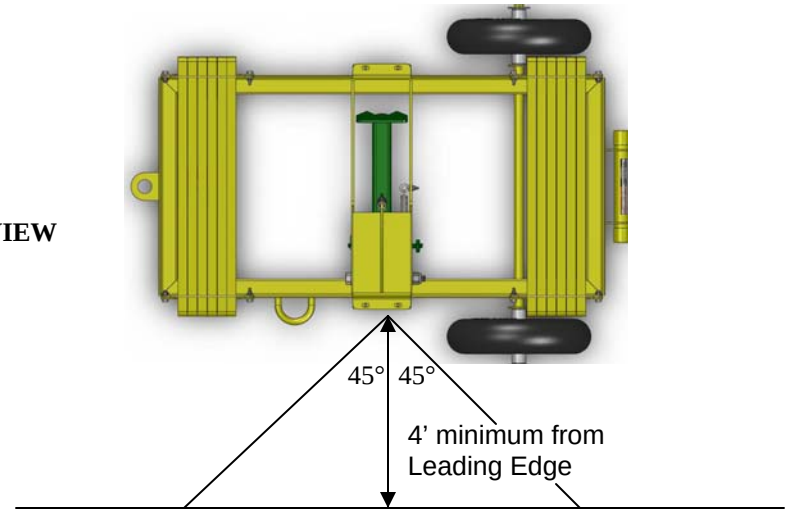

PLAN VIEW

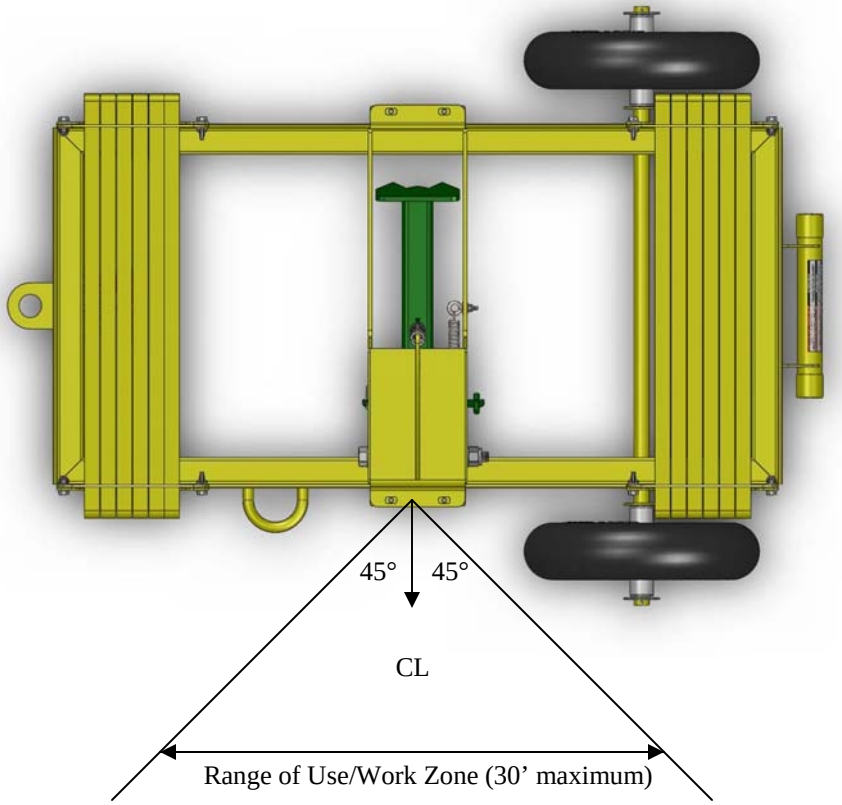

4.0 MAKING CONNECTIONS:

4.1 DO NOT hook lifeline to any point except the Fall Arrest Attachment Point or Fall Restraint Tie-off Ring.

4.2 When making connections, only use self-locking snap hooks and self-locking carabiners with this equipment. Only use connectors that are suitable to each application. Ensure all connections are compatible in size, shape and strength. Do not use equipment that is not compatible. Ensure that all connectors are fully closed and locked.

5.0 FALL RESTRAINT TIE-OFF RINGS:

5.1 The Fall Restraint Tie-Off Ring is installed on either side of the Safety Engagement Arm.

5.2 The Fall Restraint Tie-Off Ring DOES NOT arrest falls . The user must verify that the FRS, including lanyard, harness, etc., DOES NOT allow the user to fall from any edge.

6.0 BEFORE EACH USE:

6.1 OSHA 1926.502 requires that before operating the system there must be an inspection for damaged equipment.

INSPECTION STEPS

STEP 1: Check for loose, bent or damaged parts, including talon/claw tips, and locking tab.
STEP 2: Check welded connections for distortion, cracks, or other damage.
STEP 3: Check Tie-off Ring for distortion or damage.
STEP 4: All labels must be present and fully legible. (Copies of all labels are attached at the back of this section for accurate inspection.)
STEP 5: Check for corrosion on entire unit.
STEP 6: Check that the Engagement Arm Locking Mechanism is in the proper spring-loaded position.
STEP 7: Check Engagement Arm and Locking Tab for freedom of movement.

Contact AES Raptor, LLC at 1-888-990-2990 for replacement parts.

6.2 **IMPORTANT: IF THIS UNIT HAS BEEN INVOLVED IN A FALL ARREST**:

The Engagement Arm, including the Talon, Claws, and Attachment Plate, the Locking Tab, and the bronze bushings located at the pin connection where the Engagement Arm is attached to the Carriage MUST be replaced regardless of the magnitude of the previous fall. Contact AES Raptor, LLC at 1-888-990-2990 for replacement parts.

IMPORTANT: BEFORE USING THIS UNIT, A RESCUE PROCEDURE (PLAN) MUST BE ADOPTED AND LEARNED. A FALL EVENT IS NOT THE TIME TO DEVELOP SUCH PLANS.

6.3 OSHA 1926.502(d) requires employers to provide prompt rescue of employees in the event of a fall or employers shall assure that employees are able to rescue themselves. It is IMPOSSIBLE to guarantee that an employee can rescue himself because he may be unconscious or injured as a cause or result of the fall. Therefore, a rescue procedure involving rescuers necessarily must be adopted. See Section 10.0 in this manual for procedure for handling the STINGER™ during a rescue. See Section 11.0 for greatly simplifying your rescue procedure, and increasing your chance of effecting a rescue, with the Raptor Rescue Retrieval System (highly recommended) and Raptor Alert (highly recommended).

DO NOT OPERATE DAMAGED EQUIPMENT. DO NOT OPERATE EQUIPMENT THAT HAS BEEN MODIFIED.
(Please use the Inspection and Maintenance Log on page 12.)

6.4 **MAINTENANCE, CARE, and STORAGE:**

A. Inspect all AES Raptor STINGER™ equipment and parts before and after each use.

B. Keep wheels free from roofing build up or debris.

C. Regularly inspect all bolts, pins, and springs. Damaged or missing pins can severely hinder the safety factor of the STINGER™ unit.

D. Store STINGER™ unit in a place protected from weather and where only authorized employees have access.

E. Maintain paint finish to prevent corrosion.

7.0 GENERAL SAFETY

7.1 USE COMMON SENSE! Most accidents can be avoided by using common sense and concentrating on the job to be done.

7.2 The AES Raptor STINGER™ should not be used by persons whose ability or alertness is impaired by fatigue, intoxicating beverages, illegal or prescription drugs, or any other physical cause that exposes the user or others to injury.

7.3 Always wear proper safety attire.

7.4 Keep hands and feet clear of moving parts, Engagement Arm, etc. DO NOT stick hands or fingers in the equipment when operating.

7.5 Do not operate the equipment near electrical power lines.

7.6 Do not allow passengers to ride on safety cart.

7.7 Ensure that the safety arm works properly. Make sure that all areas directly underneath, and in front of the cart, are clear and free of debris.

7.8 Do not use on icy roofs.

7.9 Only use the unit on a surface or roof composition for which it has been tested.

7.10 Do not set unit atop unfastened materials. Materials may slide if not mechanically attached to the roof.

7.11 Additional workers may be required to safely move the unit. Always use caution and common sense when moving the unit.

8.0 Usability with Other Equipment:

8.1 Unlike the AES Raptor R1000 and TriRex mobile fall protection units, the STINGER™ is not designed for mounting or storing other equipment such as generators, air compressors, or tools.

8.2 DO NOT place tools or any equipment on the STINGER™ unit.

8.3 Using the STINGER™ unit with equipment, tools, or other items resting on the unit is unsafe and the unit is deemed unable to arrest or prevent a fall.

8.4 Keep electrical cords, and other cables away from the STINGER™ unit.

9.0 HOISTING: ***WARNING***

9.1 Loads may slip or fall if proper lifting procedures are not used.

9.2 A falling load may cause serious injury or death.

9.3 Do not use with damaged slings or chain. For inspection criteria see ASME B30.9.

9.4 Utilize appropriate Rigging Gear suitable for overhead lifting.

9.5 Utilize Rigging Gear within the industry standards and the manufacturer's recommendations.

9.6 Conduct regular inspection and maintenance of the Rigging Gear.

9.7 **DO NOT hook lifeline to designated Hoisting Guide-Rings.**

9.8 The STINGER™ is designed to be hoisted by attaching a cable or wire rope to the single Lifting-Eye as shown. Before turning the unit on-end and before hoisting, remove the removable weights from the unit. If the unit is to be hoisted through a small space, the removable wheels may be removed via a pin on each axle. Refer to the following illustration for proper hoisting:

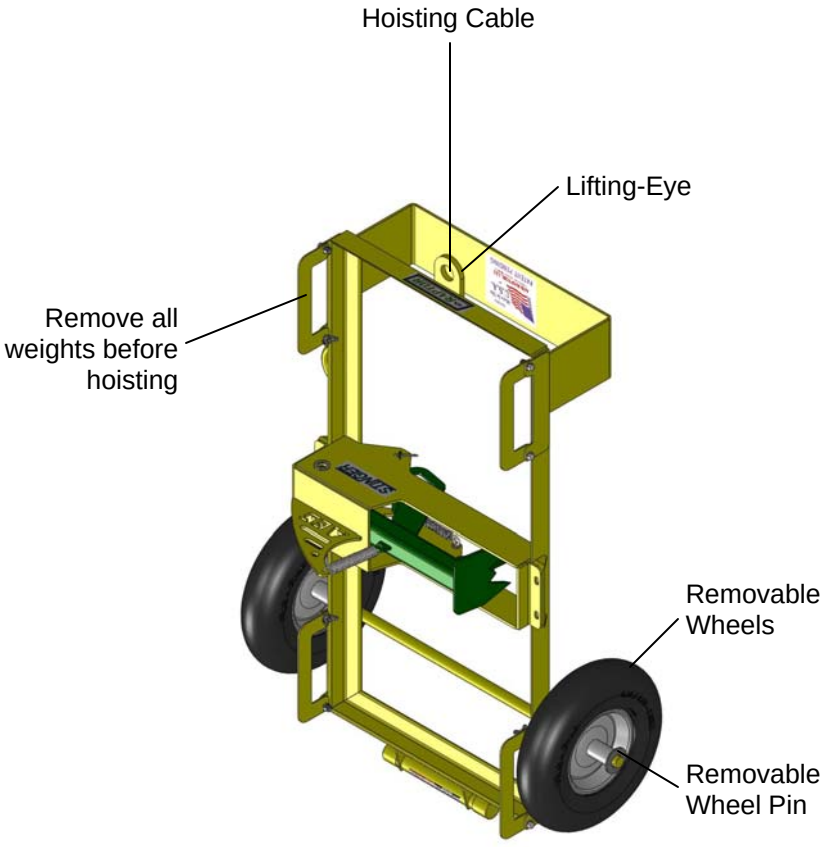

HOISTING DIAGRAM

10.0 PROCEDURE FOR HANDLING THE STINGER™ IN THE EVENT OF A FALL

10.1 Before rescuing a fallen employee, assess the STINGER™ Unit to be certain it has stabilized after activation. It is highly recommended that any rescuer be tied off in a FRS before attempting to aid in a rescue.

10.2 If the STINGER™ unit comes with a Raptor Rescue Retrieval System (highly recommended, see Section 11.0 below), simply extend the cable to the fallen worker, verify that the worker has secured himself to the cable carabiner, and crank the winch until the worker can climb onto the roof, can be pulled onto the roof by rescuers, or can be lowered to the level below.

10.3 Complete the rescue procedure before attempting to "de-activate" the STINGER™ Unit. When the STINGER™ has been activated, the Engagement Arm will likely be severely wedged into the roof surface. Disengage the Locking Mechanism by lifting the locking mechanism tab. Use a wooden or metal beam to apply leverage to the Engagement Arm to disengage the claw and/or talon from the roof surface. Use caution when disengaging the moving parts. Keep hands and feet free of all pinch points.

10.4 Do not reuse any STINGER™ Unit until appropriate recertification and inspection has been performed.

11.0 Importance of the Raptor Rescue Retrieval System and Raptor Alert

11.1 OSHA 1926.502(d) requires employers to provide prompt rescue of employees in the event of a fall or employers shall assure that employees are able to rescue themselves. To that end, most general contractors require site-specific rescue plans. This is extremely time-consuming and leaves the possibility of oversight or unaccounted-for site changes. The alternative is installing and using the Raptor Rescue Retrieval System. It can be used wherever the STINGER™ is used, and is completely intuitive and easy to use, giving rescuers a simple means to retrieve the fallen worker, in every situation.

11.2 A well-thought-out rescue plan is USELESS if no one is aware of a fall. Jobsites are noisy, and workers are focused on the task at hand. Therefore a co-worker is likely to fall without nearby rescuers taking any action. The Raptor Alert greatly increases the chance of a rescue by emitting a 130 decibel siren and amber strobe-light.

11.3 If your STINGER™ is not equipped with the Raptor Rescue Retrieval System or Raptor Alert, contact AES Raptor, LLC at 1-888-990-2990 or your local dealer to order the Raptor Rescue Retrieval System and Raptor Alert and tremendously increase the effectiveness of the STINGER™ and likelihood of a successful rescue.

12.0 Concrete Use Limitations

12.1 Make sure the concrete surface is not wet (i.e. precipitation, condensation, water run-off), is not oily or covered in any substance, and is free of debris including loose dust.

12.2 If there is any question or uncertainty about a particular substrate or configuration, contact AES Raptor, LLC at 1-888-990-2990.

12.3 To have a specific substrate/configuration tested for your specific application, contact AES Raptor, LLC at 1-888-990-2990.

WARNING LABELS

Upon each inspection please use this page to verify that all four Warning Labels are present and fully legible.

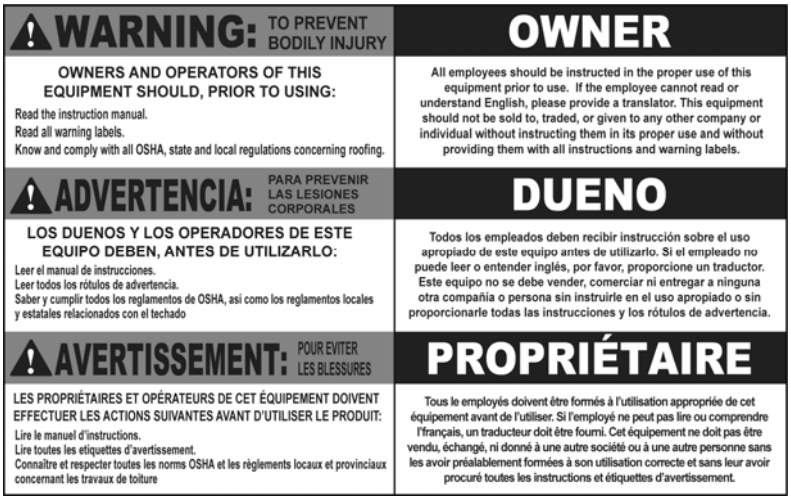

WARNING: TO PREVENT BODILY INJURY

OWNERS AND OPERATORS OF THIS EQUIPMENT SHOULD, PRIOR TO USING:

Read the instruction manual.
Read all warning labels.
Know and comply with all OSHA, state and local regulations concerning roofing.

OWNER

All employees should be instructed in the proper use of this equipment prior to use. If the employee cannot read or understand English, please provide a translator. This equipment should not be sold to, traded, or given to any other company or individual without instructing them in its proper use and without providing them with all instructions and warning labels.

ADVERTENCIA: PARA PREVENIR LAS LESIONES CORPORALES

LOS DUENOS Y LOS OPERADORES DE ESTE EQUIPO DEBEN, ANTES DE UTILIZARLO:

Leer el manual de instrucciones.
Leer todos los rótulos de advertencia.
Saber y cumplir todos los reglamentos de OSHA, así como los reglamentos locales y estatales relacionados con el techado

DUENO

Todos los empleados deben recibir instrucción sobre el uso apropiado de este equipo antes de utilizarlo. Si el empleado no puede leer o entender inglés, por favor, proporcione un traductor. Este equipo no se debe vender, comerciar ni entregar a ninguna otra compañía o persona sin instruirle en el uso apropiado o sin proporcionarle todas las instrucciones y los rótulos de advertencia.

AVERTISSEMENT: POUR EVITER LES BLESSURES

LES PROPRIÉTAIRES ET OPÉRATEURS DE CET ÉQUIPEMENT DOIVENT EFFECTUER LES ACTIONS SUIVANTES AVANT D'UTILISER LE PRODUIT:

Lire le manuel d'instructions.
Lire toutes les étiquettes d'avertissement.
Connaître et respecter toutes les norms OSHA et les règlements locaux et provinciaux concernant les travaux de toiture

PROPRIÉTAIRE

Tous le employés doivent être formés à l'utilisation appropriée de cet équipement avant de l'utiliser. Si l'employé ne peut pas lire ou comprendre l'français, un traducteur doit être fourni. Cet équipement ne doit pas être vendu, échangé, ni donné à une autre société ou à une autre personne sans les avoir préalablement formées à son utilisation correcte et sans leur avoir procuré toutes les instructions et étiquettes d'avertissement.

(Located on the Information Tube)

(Located above the talon/claws)

(Located above the Fall Restraint Ring)

(Located above the Fall Arrest Attachment Point)

Raptor Inspection and Maintenance Log

PLEASE COPY THIS LOG, FILL IT OUT BEFORE EACH USE, AND KEEP IT IN YOUR RECORDS.

RAPTOR SERIAL #: _____

RAPTOR MODEL #: _____

DATE PURCHASED: _____

INSPECTION DATE: _____

Inspection Item Noted:	Corrective Action Needed?		Maintenance Performed:
Overall Cart Parts			
	Yes	No	
Approved By:			
Welded Connection			
	Yes	No	
Approved By:			
Safety Lifeline Tie-off Rings and Hoisting D-Rings	Yes	No	
Approved By:			
Cables			
	Yes	No	
Approved By:			
Labels			
	Yes	No	
Approved By:			
Overall Cart Corrosion			
	Yes	No	
Approved By:			

Copyright © 2010 by AES Raptor, LLC
1349 Taney, North Kansas City MISSOURI 64116
www.raptorsafety.com

PRINTED IN THE UNITED STATES OF AMERICA