# INSTALLATION, OPERATION & MAINTENANCE INSTRUCTIONS

1455 Kleppe Lane ◆Sparks, NV 89431-6467 ◆(775) 359-4712 ◆Fax (775) 359-7424
E-mail: haws@hawsco.com ◆ website: www.hawsco.com

No. 2067461(19)

# Model 8309WC Barrier Free Shower & Eye/Face Wash

**NOTE TO INSTALLER: Please leave this information with the Maintenance Department.**

## LIMITED WARRANTY

HAWS® warrants that all of its products are guaranteed against defective material or poor workmanship for a period of **one year from date of shipment.** HAWS liability under this warranty shall be discharged by furnishing without charge F.O.B. HAWS Factory any goods, or part thereof, which shall appear to the Company upon inspection to be of defective material or not of first class workmanship, provided that claim is made in writing to company within a reasonable period after receipt of the product. Where claims for defects are made, the defective part or parts shall be delivered to the Company, prepaid, for inspection. HAWS will not be liable for the cost of repairs, alterations or replacements, or for any expense connected therewith made by the owner or his agents, except upon written authority from HAWS, Sparks, Nevada. HAWS will not be liable for any damages caused by defective materials or poor workmanship, except for replacements, as provided above. Buyer agrees that Haws has made no other warranties either expressed or implied in addition to those above stated, except that of title with respect to any of the products or equipment sold hereunder and that HAWS shall not be liable for general, special, or consequential damages claimed to arise under the contract of sale.

The emergency equipment manufactured by HAWS is warranted to function if installation and maintenance instructions provided are adhered to. The units also must be used for the purpose, which they were intended. This product is intended to supplement first-aid treatment. Due to widely varying conditions HAWS cannot guarantee that the use of this emergency equipment will prevent serious injury or the aggravation of existing or prior injuries.

**NO OTHER WARRANTIES EXPRESSED OR IMPLIED ARE AUTHORIZED, PROVIDED OR GIVEN BY HAWS.**

**SHOULD YOU EXPERIENCE DIFFICULTY WITH THE INSTALLATION OF THIS MODEL, PLEASE CALL:**

**1-800-766-5612**

**FOR PARTS CALL:**

**1-800-758-9378**

**(U.S.A. AND CANADA ONLY) MONDAY-THURSDAY: 6:00 A.M. – 4:00 P.M. PST**
**FRIDAY: 6:00 A.M – 1:00 P.M. PST**

**LOCATION OF UNIT:** The Model 8309WC Barrier Free Emergency Shower should be installed in close proximity to potential accident areas. It should be clearly identified, free
from obstructions and easy to access.

**SUPPLY LINE:** The minimum recommended line size is 1-1/4” IPS with 30-90 psi (2-6 ATM) flowing pressure. Where sediment or mineral content is a problem, an inlet recommended.

**PLUMBING CONNECTIONS:** Inlet supply is 1-1/4” IPS. Waste outlet is 1-1/4” IPS.

# INSTALLATION PROCEDURE

Refer to Installation drawing for parts list to insure all required parts are included. Use pipe joint sealant PST #565 (clarification. Check Loctite) on all connections.

**STEP 1:** Prepare the emergency shower foundation by using the floor flange assembly as a template. Locate the three holes for the 3/8-16 UNC x 6" anchor bolts (not supplied). They should extend 1" above the floor level.

**STEP 2:** Once the concrete foundation is ready (dry), assemble the floor flange assembly to the anchor bolts; then securely fasten with 3/8-16 UNC Hex Nuts and 3/8" washers (not supplied). Seal and tighten floor flange and tee making certain the waste tee is facing the proper location and the foot control holes are facing side to side.

**STEP 3:** Assemble nipple (1-1/4” x 19”) to the floor flange assembly and tighten with a pipe wrench.

**STEP 4:** Assemble the eyewash loop assembly to the 19” nipple from step three. Connect the pipe wrench to the galvanized nipple between the two tees to avoid damage.

**STEP 5:** Assemble in the following order:
Attach nipple (1-1/4” x 28-3/4”) and tee (1-1/4”) onto the loop assembly.
Attach nipple (1-1/4” x 25”) onto the tee.
Attach tee (1-1/4” x 1-/14” x 1”) onto nipple.
Attach valve assembly onto tee.
Assemble the street elbow (1”) onto nipple (1” x 21”).
Attach nipple onto valve.

**STEP 6:** Assemble showerhead onto street elbow (1”).

**STEP 7:** Assemble the sign onto the unit. Use the strap, screws, washers and nuts provided, to mount the sign onto the upright. The sign should be positioned for maximum visibility.

**STEP 8:** Insert the galvanized plug into the optional supply line tee that is not used. Before connecting the supply water line to the emergency shower, **FLUSH THE LINE THOROUGHLY.**

## TROUBLESHOOTING

| PROBLEM | REPAIR CHECKLIST |
|---|---|
| 1. No flow. | 1. Check the main shut-off valve. |
| 2. Insufficient water flow, shower and eyewash. | 2. Verify minimum 30 psi (2 ATM) flowing supply line pressure. |
| 3. Insufficient water flow on eyewash, however, shower is sufficient. | 3a. Verify minimum 30 psi (2 ATM) flowing supply line pressure.<br>b. Probable clogging of flow control due to inadequate line flushing. Unscrew eye/face wash head and remove the four screws to disassemble the head. Clean flow control and reassemble head. See SP65 Installation Drawing for details.<br>c. Remove cap located on L – Strainer using a 3/8” allen wrench to access and clean filter screen. |
| 4. Eyewash or face wash streams do not meet desired eye level or are not balanced. | 4a. Possible blocked flow control see above solution. (Possible non-leveled eyewash assembly.) |
| 5. Insufficient water flow at the showerhead, however, eyewash is sufficient. | 5a. Probable clogging of flow control inside shower head. Unscrew shower head off of elbow and clean rubber flow control. |
| 6. Water does not drain properly. | 6a. Check your drain system for debris. Check the main waste line of your building to see if it does handle the capacity required for the entire drainage system. |
| 7. Water leak between joints or fittings. | 7a. Tighten loose connections. If leak persists, the application of hot water will sometimes reseat improperly applied joint compound. After 30 minutes wait and retest, a persistent leak will necessitate reassembly and additional sealant. |

For more information on Haws Products, please see our website: www.hawsco.com

© 2009 Haws® Corporation – All Rights Reserved
HAWS® and other trademarks used in these materials are the exclusive property of Haws Corporation.

THIS DOCUMENT IS TRUE AND CORRECT AT TIME OF PUBLICATION. CONTINUED PRODUCT IMPROVEMENTS MAKE SPECIFICATIONS AND MEASUREMENTS SUBJECT TO CHANGE WITHOUT NOTICE.

# PARTS BREAKDOWN

| ITEM | DESCRIPTION |
|---|---|
| 1 | – |
| 2 | SP65 EYE/FACE WASH ASSY |
| 3 | – |
| 4 | – |
| 5 | SP90 BOWL |
| 6 | SP225 VALVE ASSEMBLY |
| 7 | – |
| 8 | SP829 SHOWER HEAD |
| 9 | SHOWER VALVE ASSEMBLY |
| 10 | – |
| 11 | SP178 SHOWER SIGN |
| 12 | SP75 FLOOR FLANGE |
| 13 | SP202 PULL ROD, 44" |
| 14 | – |
| 15 | SP185 STRIPE TAPE |
| 16 | SP170 TEST TAG |
| 17 | SP509 L–STRAINER |
| -- | VRKEWSTR REPAIR KIT |
| -- | SP69FC EYEWASH ASSEMBLY |

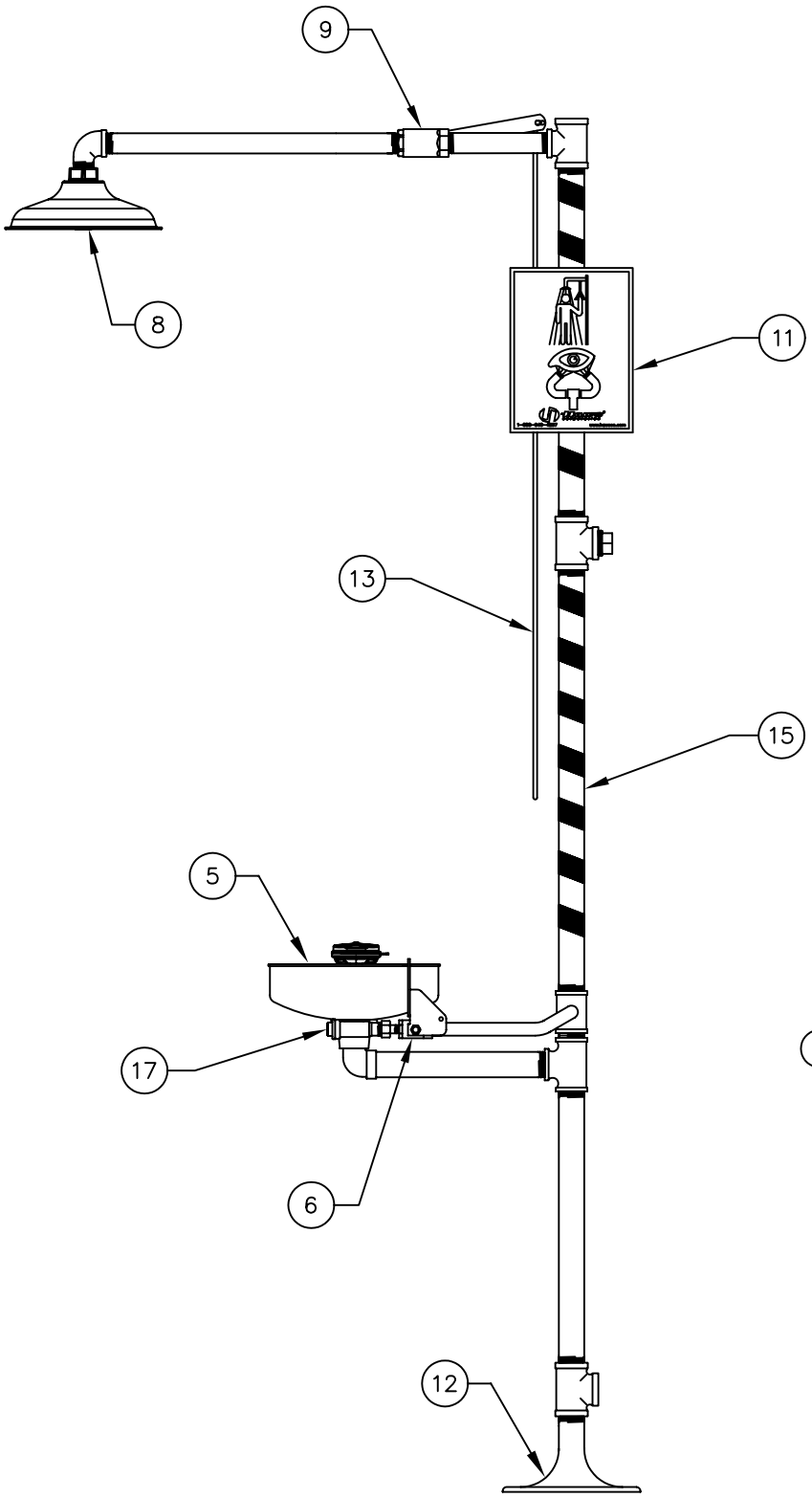


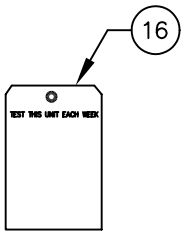


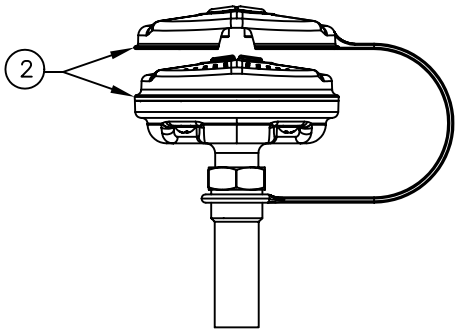


SP65 EYE/FACE WASH ASSEMBLY

| REV | DESCRIPTION | ECN | DATE | BY/APVD |
|---|---|---|---|---|
| 19 | UPDATED PER ECN | 4367 | 12/3/09 | IR |

REVISIONS

**WHEN ORDERING PARTS PLEASE SPECIFY YOUR MODEL NUMBER**

Haws corporation
1455 KLEPPE LANE
SPARKS, NEVADA 89431
(775) 359-4712 FAX (775) 359-7424
E-MAIL: HAWS@HAWSCO.COM
WEBSITE: WWW.HAWSCO.COM

| DRAWN BY: | DATE: | CHECK BY: | APP'VD BY: | SCALE: |
|---|---|---|---|---|
| D.O. | 07/30/96 | | | 1/6 |

| TITLE: BARRIER FREE SHOWER AND EYE/FACE WASH | PART NUMBER: |
|---|---|
| 8309WC | 0002067461 |
| DRAWING TYPE: PARTS BREAKDOWN | DRAWING NUMBER: 12553C00 — REV. 19 |

©2009 Haws Corporation - All Rights Reserved
HAWS® and other trademarks used in these materials are the exclusive property of Haws Corporation.

THIS DOCUMENT IS TRUE AND CORRECT AT TIME OF PUBLICATION. CONTINUED PRODUCT IMPROVEMENTS MAKE SPECIFICATIONS AND MEASUREMENTS SUBJECT TO CHANGE WITHOUT NOTICE.



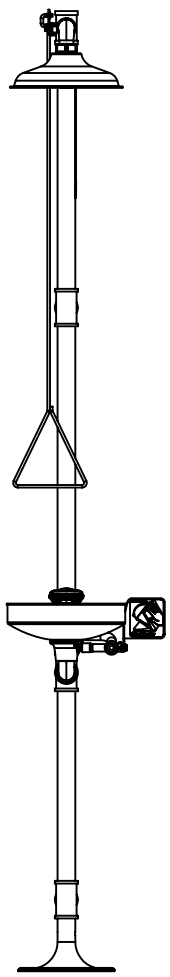

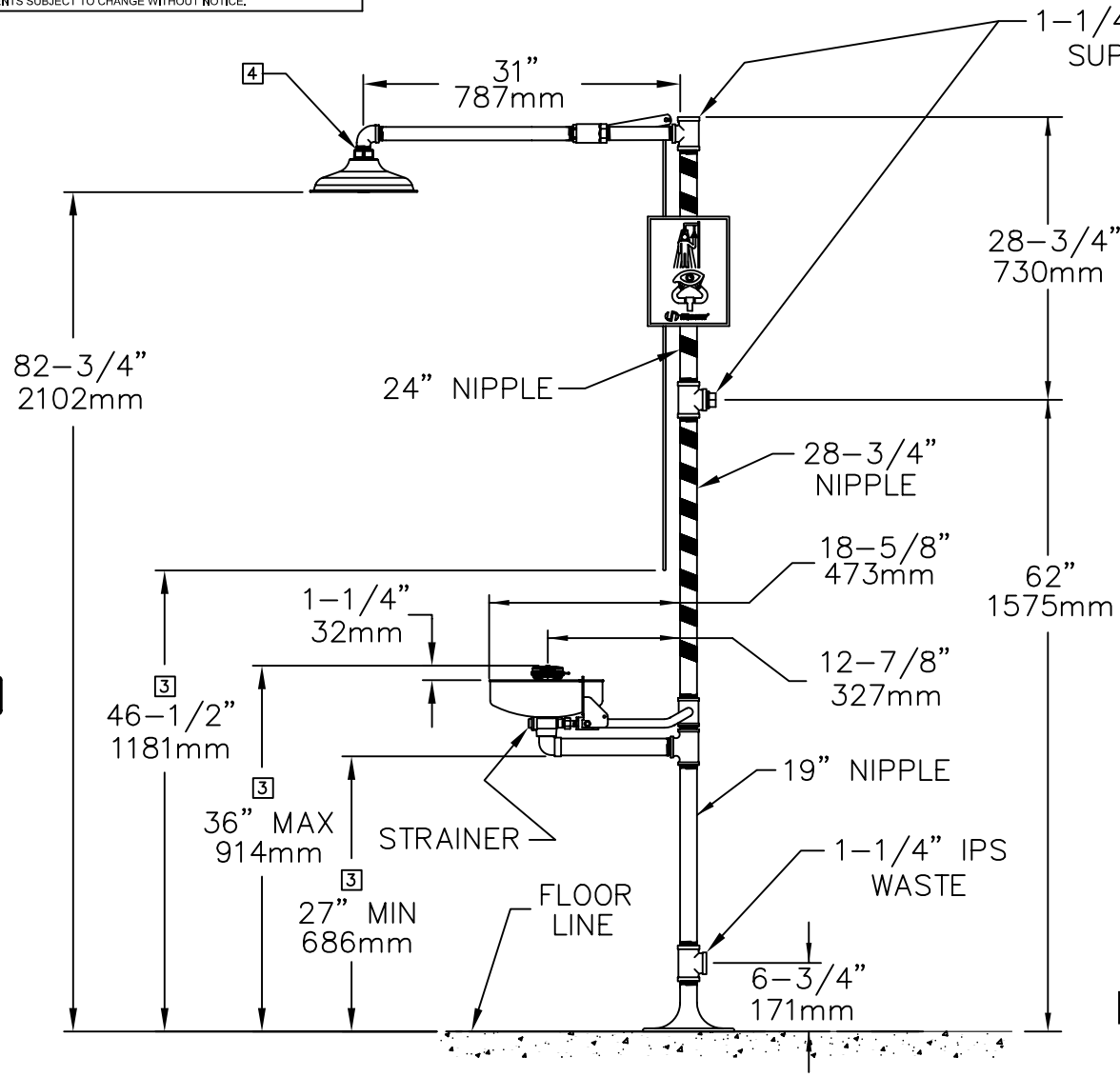


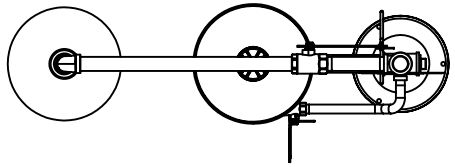

TOP VIEW

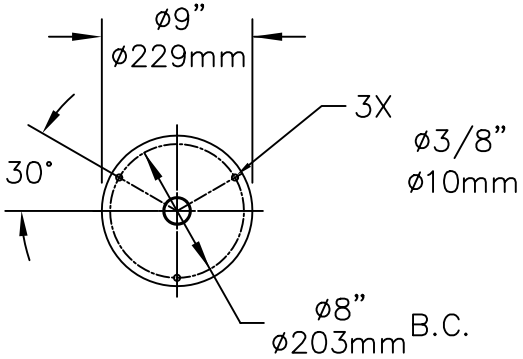


MOUNTING DETAIL

NOTES:

1. DIMENSIONS MAY VARY BY ± 1/2 INCH [13mm].
2. TO COMPLY WITH ANSI Z358.1-2009 FOR EMERGENCY EYEWASH OR EYE/FACE WASH AND SHOWER EQUIPMENT:
   - UNIT SHALL BE INSTALLED IN ACCORDANCE WITH MANUFACTURER'S INSTRUCTIONS AND ACCEPTABLE PLUMBING PRACTICES.
   - EYEWASH OR EYE/FACE WASH SHALL BE POSITIONED WITH NOZZLES NOT LESS THAN 83.8 CM (33 IN.) AND NO GREATER THAN 114.3 CM (45 IN.) FROM SURFACE ON WHICH USER STANDS AND 15.3 CM (6 IN.) MINIMUM FROM WALL OR NEAREST OBSTRUCTION.
   - SHOWER SHALL BE POSITIONED SO THAT SHOWER HEAD IS NOT LESS THAN 208.3 CM (82 IN.) NOR MORE THAN 243.8 CM (96 IN.) FROM SURFACE ON WHICH USER STANDS.
   - SHOWER SPRAY PATTERN SHALL HAVE A MINIMUM DIAMETER OF 50.8 CM (20 IN.) AT 152.4 CM (60 IN.) ABOVE SURFACE ON WHICH USER STANDS, AND CENTER OF SPRAY PATTERN SHALL BE LOCATED AT LEAST 40.6 CM (16 IN.) FROM ANY OBSTRUCTION.

3 THESE DIMENSIONS MUST BE MAINTAINED TO MEET WHEELCHAIR ACCESSIBILITY REQUIREMENTS AND STILL COMPLY WITH ANSI REQUIREMENTS STATED ABOVE.

4 DO NOT USE REGULAR PIPE SEALANT, IF NECESSARY, USE DOW CORNING 832 SEALANT. PLACING 5 SMALL BEADS ON THE MALE THREADS, JUST ABOVE THE FIRST THREAD.

Haws corporation
1455 KLEPPE LANE
SPARKS, NEVADA 89431
(775) 359-4712 FAX (775) 359-7424
E-MAIL: HAWS@HAWSCO.COM
WEBSITE: WWW.HAWSCO.COM

| ECN NO. | REVISED PER | BY: | MODEL(S): BARRIER FREE SHOWER AND EYE/FACE WASH | PART NUMBER: |
|---|---|---|---|---|
| . | ECN: 4367 | IR | 8309WC | 0002067461.D |
| DRAWN: D.O. | DATE: 07/96 | CHK'D.: | INFO FAX DOC #: 2830992 | DRAWING NUMBER: 12554A00 / REV. 19 |
| APPROVED: | DATE: | | SCALE: 1:18 / DRAWING TYPE: INSTALLATION/FAXBACK | SIZE: A / SHEET 1 OF 1 |

DWG. NO. 12554A00

©2009 Haws Corporation - All Rights Reserved HAWS® and other trademarks used in these materials are the exclusive property of Haws Corporation.